ECHO-MAGNETIC BUZZER

B161 SERIES

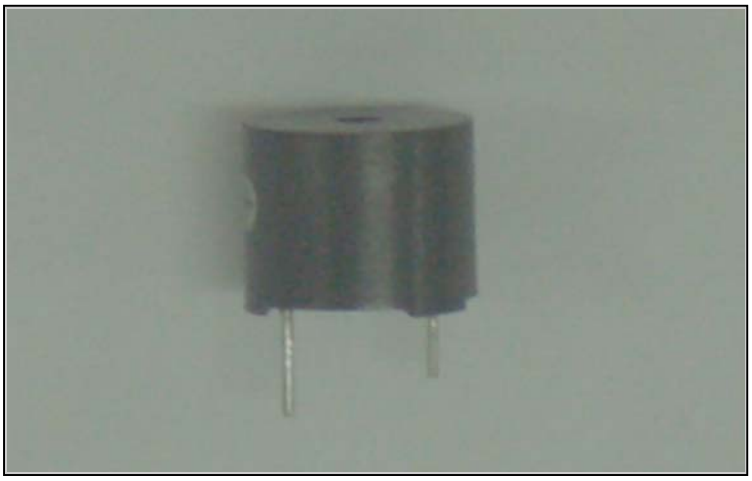

FEATURES:

- **Emit a clear sound**
- **Small size & lightweight**
- **Single tone**
- **Medium loudness**
- **No electric noise**
- **PCB mounting**
- **Operating temperature –20^{0}C--+70^{0}C**
- **Storage temperature -40^{0}C--+85^{0}C**

DIMENSIONS: (unit: mm)

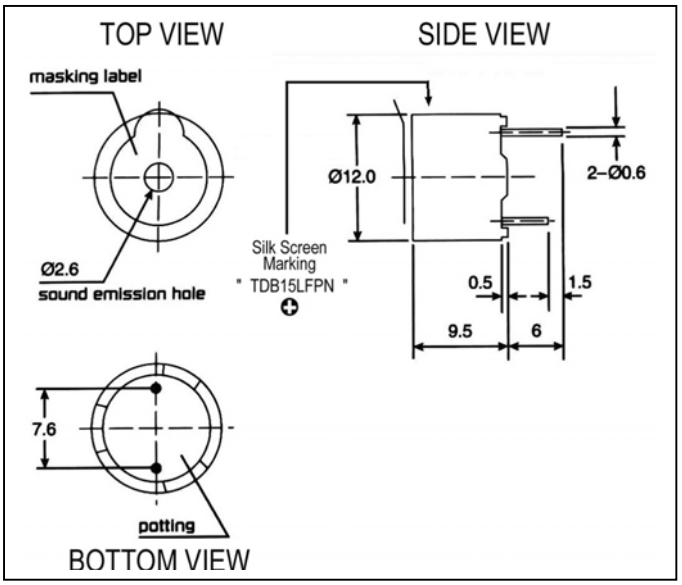

CHARACTERISTICS:

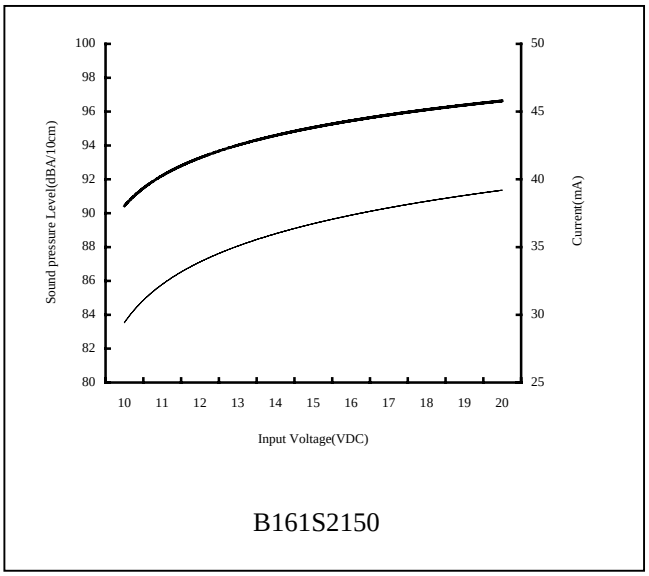

Remark: _____ Pressure level ------ Current

SPECIFICATIONS:

Model No.	Operating Voltage (VDC)	Rated Voltage (VDC)	Max. Current at Rated Voltage (mA)	Frequency (kHz)	Min. Sound Pressure at Rated Voltage (dBA/10cm)	Tone	Terminal
B161S2150P	12-18	15	45	2.3±0.3	94	SINGLE	PIN