ECHO-PIEZO BUZZER

B143 SERIES

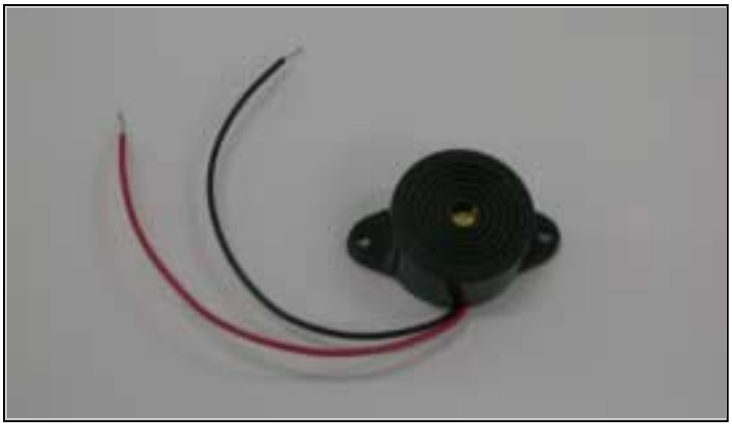

FEATURES:

- **Medium to loud sound output**
- **Low current comsumption**
- **Extremely durable & long life**
- **Operating temperature –20^{0}C--+70^{0}C**
- **Storage temperature -30^{0}C--+70^{0}C**

DIMENSIONS:

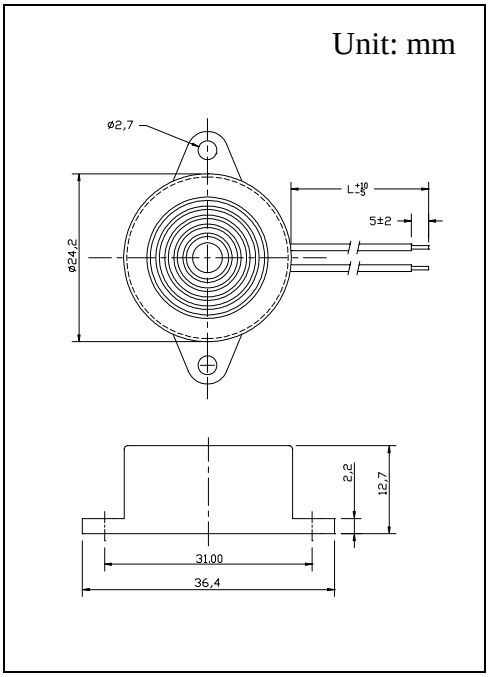

CHARACTERISTICS:

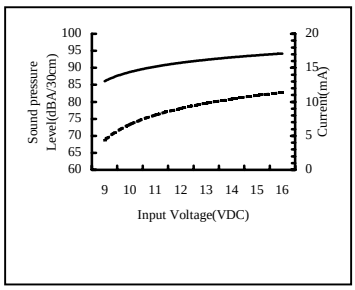

B143S3120

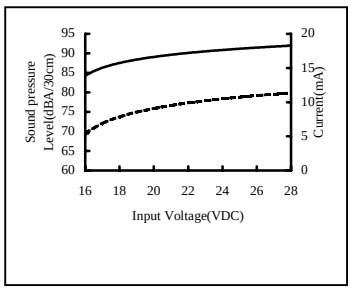

B143S3240

Remark: ——— Pressure level ------ Current

SPECIFICATIONS:

Model No.	Operating Voltage (VDC)	Rated Voltage (VDC)	Max. Current at Rated Voltage (mA)	Frequency (kHz)	Min. Sound Pressure at Rated Voltage (dBA/30cm)	Pulse Rate at Rated Voltage (Pulse/Sec)	Tone	Terminal
B143S3120	9-16	12	15	3.3±0.5	90	NIL	SINGLE	LEAD
B143S3240	16-28	24	15	3.0±0.5	90	NIL	SINGLE	LEAD